Klimas Wkręt-met Sp. z o.o. ul. W. Witosa 170/176
Kuźnica Kiedrzyńska 42-233 Mykanów
tel. +48 34 377 71 00, fax. +48 34 328 01 73 Hotline: 801 477 477, www.wkret-met.com

PRODUCT DATA SHEET – LSI-12

Section 1. PRODUCT DESCRIPTION

SINGLE SLEEVE ANCHOR WITH WASHER NUT – LSI-12







Single sleeve anchor LSI consists of a threaded mandrel with an expanding cone, a steel expansion sleeve with a cut on part of its length, and a hexagon nut with a flange. Corrosion protection is ensured by galvanized zinc coating. Fixing is executed by tightening the nut with adequate torque which causes sliding of sleeves over the expansion cone, pulling notched portions of the sleeve apart, and creates a permanent anchorage. The anchor is perfect for machine and equipment medium duty fixings, for fixing of static load bearing structural steel components, frames, railings, balustrades, etc.

Recommended for substrates:

- **non-cracked reinforced and non-reinforced concrete of C20/25 ÷ C50/60 strength class**

Advantages:

- **fast and simple installation by driving the anchor and tightening**
- **ready to carry full capacity instantly**
- **delivered as factory integrated with nut and washer**



Steel anchors hold National Technical Assessment: ITB-KOT-2018/0377 Rev. 3

Section 2. METHOD OF INSTALLATION

1. Original mechanical anchors delivered by the manufacturer can be used only
2. Before installation check whether parameters of the substrate (where anchors are to be installed) conform to parameters of the substrate used in testing, based on which characteristic loading resistances of connections were determined
3. Install anchors so that reinforcement of the substrate is not damaged
4. Before installation, indicate the drilling points where anchors are to be installed in accordance with installation guidelines
5. Then drill the holes in accordance with the parameters selected (diameter and depth of the hole), perpendicularly to the substrate
6. Clean holes with SCF brush (3x) and blow out clean with PCF pump (3x)
7. Drive anchor into the hole by light hits of a hammer and then tighten the nut by applying an adequate torque (T_{inst}) using torque wrench
8. Note that after the anchor is expanded, the washer under the nut should be pressed against the fixed member

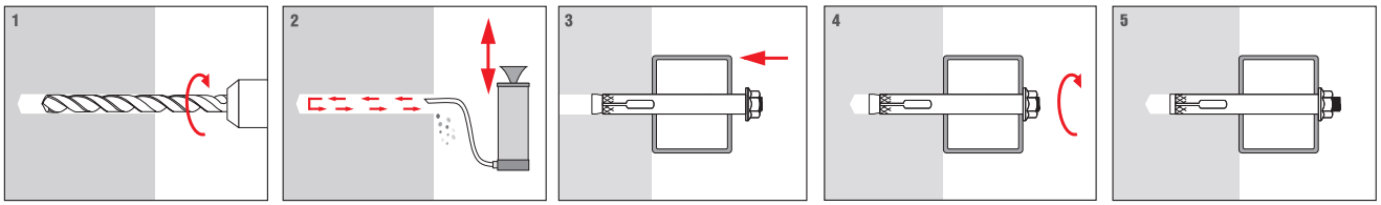

Section 3. TECHNICAL DATA

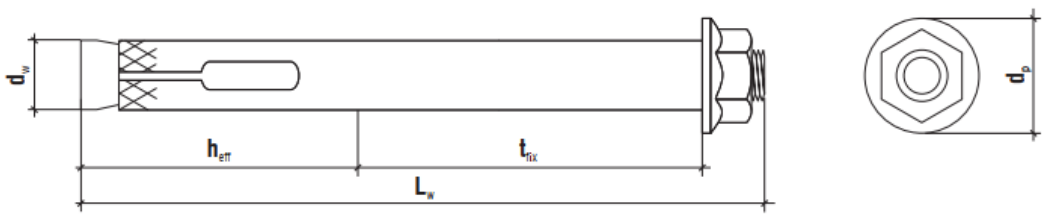

All rights reserved The sheet may be disclosed only in the form as delivered. No part (contents such as text, graphics, logos, figures, pictures, and any other data) given in this document may be modified or published whatsoever in part, without prior authorisation. Any trademarks, graphic symbols, trade names, logos and other data are protected by copyright and are property of their owner. Created: 2013-10-16
Updated: 2026-08-24

PRODUCT DATA SHEET – LSI-12

TABLE 1. TECHNICAL PARAMETERS AND INSTALLATION DATA			
Parameters			Anchor size
			M12
Anchor diameter	d_w	[mm]	12
Hole diameter	d_0	[mm]	12
Fixed member hole diameter	d_f	[mm]	14
Min. anchorage depth	h_{eff}	[mm]	50
Min. hole depth	h_0	[mm]	60
Min. substrate thickness	h_{min}	[mm]	100
Min. spacing between anchors	s_{min}	[mm]	150
Min. distance from substrate edge	c_{min}	[mm]	75
Torque	T_{inst}	[Nm]	30
National Technical Assessment	[-]	[-]	ITB-KOT-2018/0377 Rev. 3

TABLE 2. RESISTANCE			
Type	Min. anchorage depth	Non-cracked concrete C20/25	
		Characteristic pull-out strength	Characteristic shear strength
	h_{eff} [mm]	$N_{R,k}$ [kN]	$V_{R,k}$ [kN]
LSI-12	50	12.0	12.0

*Recommended partial safety factor of:
2.52 (pull-out) / 1.25 (shear)

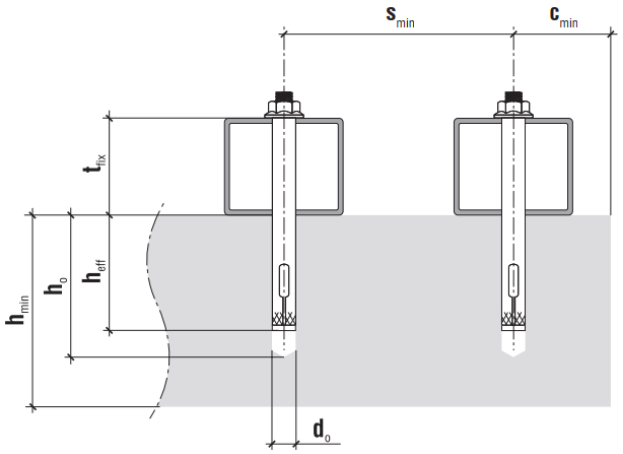

TABLE 3. SELECTION TABLE					
Product code	Anchor diameter and length	Max. thickness of fixed member	Thread	Nut head type	Pieces per pack
	d_w x L_w [mm]	t_{fix} [mm]	[-]	[-]	[pcs.]
LSI-12060	12 x 66	1	M10	SW-17	25
LSI-12075	12 x 81	8	M10	SW-17	25
LSI-12100	12 x 106	33	M10	SW-17	20
LSI-12129	12 x 136	63	M10	SW-17	20

Section 4. REMARKS

1. All previous versions of this Product Data Sheet shall cease to be valid
2. Data given in this Product Data Sheet is in accordance with current knowledge and published in good faith.
   Klimas Wkręt-met Sp. z o.o. is not responsible for correctness and quality of the fixing if recommendations regarding method of use and installation are not followed.

All rights reserved The sheet may be disclosed only in the form as delivered. No part (contents such as text, graphics, logos, figures, pictures, and any other data) given in this document may be modified or published whatsoever in part, without prior authorisation. Any trademarks, graphic symbols, trade names, logos and other data are protected by copyright and are property of their owner. Created: 2013-10-16
Updated: 2026-08-24