Klimas Wkręt-met sp. z o.o. ul. Wincentego Witosa 170/176
Kuźnica Kiedrzyńska PL 42-233 Mykanów
tel. +48 34 377 71 00, fax +48 34 328 01 73 Hotline: 801 477 477, www.wkret-met.com

PRODUCT DATA SHEET - FIXPLUG-8

Section 1. PRODUCT DESCRIPTION

HAMMER DRIVEN FASTENER WITH PLASTIC PIN AND TELESCOPIC DESIGN SUPPORT WASHER - FIXPLUG-8

Hammer driven fastener with plastic pin and telescopic design support washer FIXPLUG-8 is made from polyethylene, and the pin from glass fibre-reinforced polyamide which improves its strength. The applied telescopic solution allows for problem-free facing of the support washer and polystyrene surface by its shallow recess. Fastener FIXPLUG-8 should be used to transfer loads of wind suction forces and applied as an additional mechanical fixing for the whole system, recommended for:

- **Polystyrene EPS**
- **XPS polystyrene**

Types of substrates on which the FIXPLUG-8 fastener can be installed according to EAD 330196-01-0604:

A	B	C	D	E
				
Concrete	Solid ceramic brick, silicate	Ceramic block	Lightweight aggregate elements	Aerated concrete

The fasteners have the European Technical Assessment: ETA-15/0373







innovative sleeve design



glass-fibre reinforced pin



plate design





Section 2. INSTALLATION METHOD

1. Before starting the installation, it is necessary to recognise the support and select the fasteners intended for it
2. The appropriate fastener length must be chosen so that the expansion zone is in the wall construction material
3. The minimum length of the fastener is: $L_d=t_{fix}+t_{tol}+h_{eff}$, where: t_{fix} - thickness of attached thermal insulation, t_{tol} - thickness of levelling layers (adhesive mortar + existing plaster), h_{eff} - anchorage depth of the fastener in the substrate (stated in the data sheet and technical approval)
4. Before installation, the substrate must be prepared according to the recommendations of the ETICS insulation system manufacturer
5. Thermal insulation panels must be adequately fixed with adhesive mortar
6. The diameter of the holes drilled must correspond to the diameter of the fasteners used
7. Holes in substrates made of solid materials should be at least 10 mm deeper than the anchoring depth of the fastener
8. Holes in solid materials must be cleaned of drill residue using a back-and-forth motion of the drill at reduced speed, repeating the operation four times.
9. Holes in substrates with voids and aerated concrete must be drilled without the use of a hammer, as this would cause the inner walls of the substrate to crack, reducing the tear resistance of the fasteners.
10. The fasteners must be fixed so that the installation location coincides with the position of the adhesive mortar on the thermal insulation board.
11. The fastener body must be positioned so that the fastener pressure plate is flush with the heat-insulating material.
12. Then insert the fastener pin so that the pressure plate gently sinks approx. 2-3 mm into the polystyrene

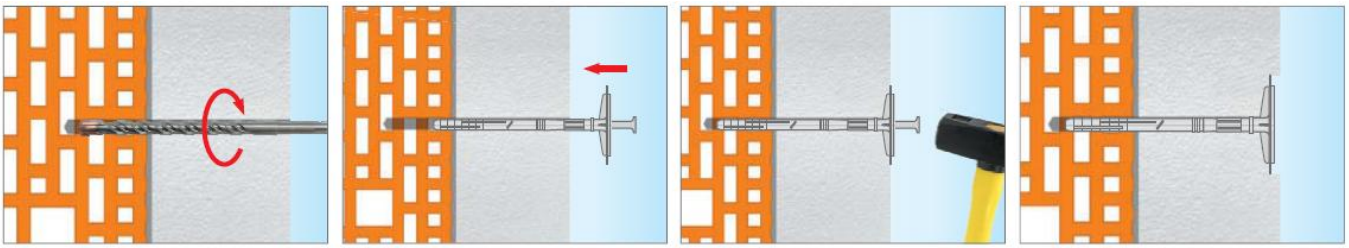

All rights reserved. The Charter may only be made available in the form in which it was delivered. No part (content such as text, graphics, logos, images, photos and any other data) presented in this document may be modified in any way or distributed in part without prior permission. All trademarks, graphics, brand names, logos and other data are protected by law and belong to their respective owners. Date of preparation: 16.10.2013 Date of update: 22.06.2026

Section 3. SPECIFICATIONS

TECHNICAL PARAMETERS		
Parameter	Unit	Value
Fastener diameter	d_k [mm]	8
Plate diameter	D_k [mm]	60
Anchorage depth	h_{eff} [mm]	40
Depth of hole	h_0 [mm]	50
Point thermal conductivity	χ [W/K]	0.000
Plate rigidity	S [kN/mm]	0,60
Utility categories	[-]	ABCDE
Fastener material	[-]	PE
Stem material	[-]	PA+GF
European Technical Assessment	[-]	ETA-15/0373

STRENGTH PARAMETERS			
Substrate category	Type of substrate	Density [kg/dm^3]	Characteristic load capacity [kN]
A	Concrete C12/15	≥ 2,25	0,60
A	Concrete C16/20- C50/60	≥ 2,30	0,90
B	Solid ceramic brick	≥ 2,00	0,90
B	Solid silicate brick	≥ 2,00	0,90
C	Silicate channel blocks	≥ 1,60	0,60
C	Ceramic hollow brick	≥ 1,20	0,40
C	Lightweight concrete blocks	≥ 0,80	0,75
D	Lightweight concrete blocks	≥ 1,05	0,60
E	AAC2 aerated concrete	≥ 0,35	0,50
E	AAC7 aerated concrete	≥ 0,65	0,75

Partial safety factor γ_M = 2 in the absence of regulation

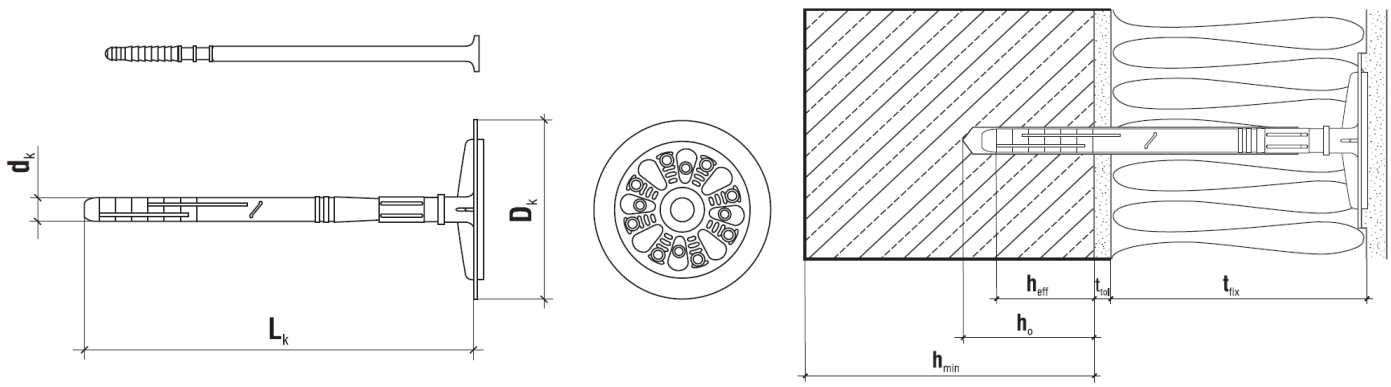

SELECTION TABLE				
Product code	Fastener diameter and length (d_k x L_k)	Thickness of thermal insulation material t_{fix} [mm]		Quantity in pack [pcs.]
		New buildings (t_{tol} adhesive layer of 10mm)	Old buildings (t_{tol} adhesive layer of 10mm + 20mm of old plaster)	
FIXPLUG-08110	8x110	60	40	200
FIXPLUG-08130	8x130	80	60	200
FIXPLUG-08150	8x150	100	80	200
FIXPLUG-08170	8x170	120	100	200
FIXPLUG-08190	8x190	140	120	200
FIXPLUG-08210	8x210	160	140	100

Section 4. NOTES

1. All previous versions of this Data Sheet are no longer valid
2. The data in this Product Data Sheet are in accordance with the current state of knowledge and are given in good faith. If the recommendations on how to use and install the product are not followed, Klimas Wkret-met Sp. z o.o. is not responsible for the correctness and quality of the connection.

All rights reserved. The Charter may only be made available in the form in which it was delivered. No part (content such as text, graphics, logos, images, photos and any other data) presented in this document may be modified in any way or distributed in part without prior permission. All trademarks, graphics, brand names, logos and other data are protected by law and belong to their respective owners. Date of preparation: 16.10.2013 Date of update: 22.06.2026