Klimas Wkręt-met Sp. z o.o. ul. W. Witosa 170/176
Kuźnica Kiedrzyńska 42-233 Mykanów
tel. +48 34 377 71 00, fax. +48 34 328 01 73 Hotline: 801 477 477, www.wkret-met.com

# PRODUCT DATA SHEET – LSI-10

## Section 1. PRODUCT DESCRIPTION

**SINGLE SLEEVE ANCHOR WITH WASHER NUT – LSI-10**








**Single sleeve anchor LSI consists of a threaded mandrel with an expanding cone, a steel expansion sleeve with a cut on part of its length, and a hexagon nut with a flange. Corrosion protection is ensured by galvanized zinc coating. Fixing is executed by tightening the nut with adequate torque which causes sliding of sleeves over the expansion cone, pulling notched portions of the sleeve apart, and creates a permanent anchorage. The anchor is perfect for machine and equipment medium duty fixings, for fixing of static load bearing structural steel components, frames, railings, balustrades, etc.**

**Recommended for substrates:**

- **non-cracked reinforced and non-reinforced concrete of C20/25 ÷ C50/60 strength class**

**Advantages:**

- **fast and simple installation by driving the anchor and tightening**
- **ready to carry full capacity instantly**
- **delivered as factory integrated with nut and washer**



**Steel anchors hold National Technical Assessment: ITB-KOT-2018/0377 Rev. 3**

## Section 2. METHOD OF INSTALLATION

1. Original mechanical anchors delivered by the manufacturer can be used only
2. Before installation check whether parameters of the substrate (where anchors are to be installed) conform to parameters of the substrate used in testing, based on which characteristic loading resistances of connections were determined
3. Install anchors so that reinforcement of the substrate is not damaged
4. Before installation, indicate the drilling points where anchors are to be installed in accordance with installation guidelines
5. Then drill the holes in accordance with the parameters selected (diameter and depth of the hole), perpendicularly to the substrate
6. Clean holes with SCF brush (3x) and blow out clean with PCF pump (3x)
7. Drive anchor into the hole by light hits of a hammer and then tighten the nut by applying an adequate torque ($T_{inst}$) using torque wrench
8. Note that after the anchor is expanded, the washer under the nut should be pressed against the fixed member

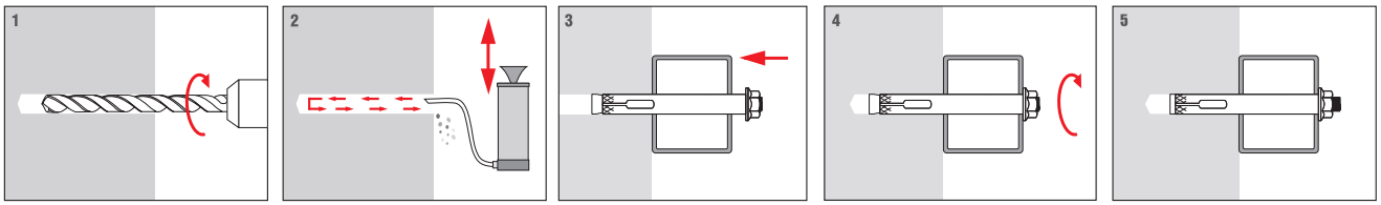


## Section 3. TECHNICAL DATA

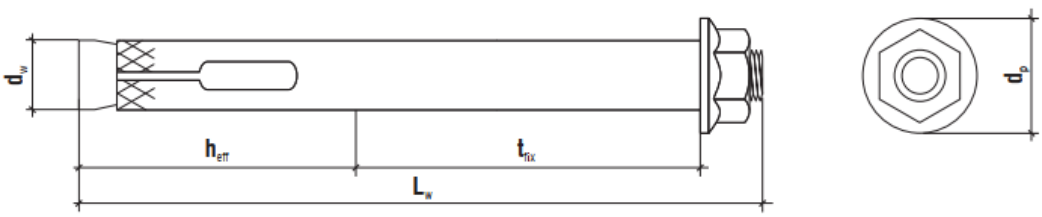


**All rights reserved** The sheet may be disclosed only in the form as delivered. No part (contents such as text, graphics, logos, figures, pictures, and any other data) given in this document may be modified or published whatsoever in part, without prior authorisation. Any trademarks, graphic symbols, trade names, logos and other data are protected by copyright and are property of their owner. Created: 2013-10-16
Updated: 2026-08-07

# PRODUCT DATA SHEET – LSI-10

| TABLE 1. TECHNICAL PARAMETERS AND INSTALLATION DATA | | | |
|---|---|---|---|
| Parameters | | | Anchor size |
| | | | M10 |
| Anchor diameter | $d_w$ | [mm] | 10 |
| Hole diameter | $d_0$ | [mm] | 10 |
| Fixed member hole diameter | $d_f$ | [mm] | 12 |
| Min. anchorage depth | $h_{eff}$ | [mm] | 40 |
| Min. hole depth | $h_0$ | [mm] | 50 |
| Min. substrate thickness | $h_{min}$ | [mm] | 100 |
| Min. spacing between anchors | $s_{min}$ | [mm] | 120 |
| Min. distance from substrate edge | $c_{min}$ | [mm] | 60 |
| Torque | $T_{inst}$ | [Nm] | 15 |
| National Technical Assessment | [-] | [-] | ITB-KOT-2018/0377 Rev. 3 |

| TABLE 2. RESISTANCE | | | |
|---|---|---|---|
| Type | Min. anchorage depth | Non-cracked concrete C20/25 | |
| | | Characteristic pull-out strength | Characteristic shear strength |
| | $h_{eff}$ [mm] | $N_{R,k}$ [kN] | $V_{R,k}$ [kN] |
| LSI-10 | 40 | 5.0 | 5.0 |

*Recommended partial safety factor of:
2.52 (pull-out) / 1.25 (shear)

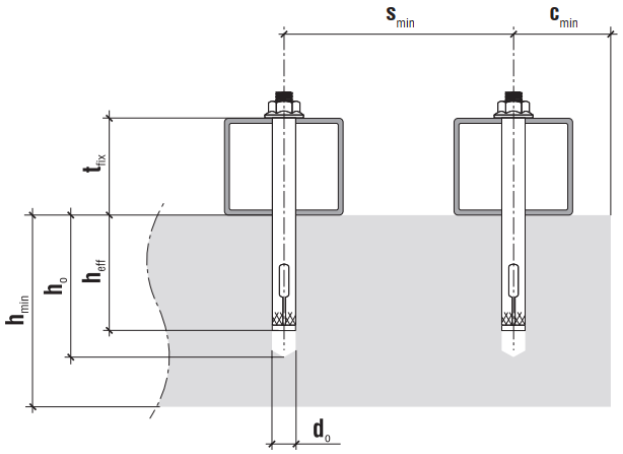


| TABLE 3. SELECTION TABLE | | | | | |
|---|---|---|---|---|---|
| Product code | Anchor diameter and length | Max. thickness of fixed member | Thread | Nut head type | Pieces per pack |
| | $d_w$ x $L_w$ [mm] | $t_{fix}$ [mm] | [-] | [-] | [pcs.] |
| LSI-10050 | 10 x 57 | 1 | M8 | SW-13 | 50 |
| LSI-10060 | 10 x 67 | 9 | M8 | SW-13 | 50 |
| LSI-10077 | 10 x 82 | 24 | M8 | SW-13 | 50 |
| LSI-10097 | 10 x 102 | 44 | M8 | SW-13 | 25 |

## Section 4. REMARKS

1. All previous versions of this Product Data Sheet shall cease to be valid
2. Data given in this Product Data Sheet is in accordance with current knowledge and published in good faith.
   Klimas Wkręt-met Sp. z o.o. is not responsible for correctness and quality of the fixing if recommendations regarding method of use and installation are not followed.

**All rights reserved** The sheet may be disclosed only in the form as delivered. No part (contents such as text, graphics, logos, figures, pictures, and any other data) given in this document may be modified or published whatsoever in part, without prior authorisation. Any trademarks, graphic symbols, trade names, logos and other data are protected by copyright and are property of their owner. Created: 2013-10-16
Updated: 2026-08-07