Klimas Wkręt-met sp. z o.o. ul. Wincentego Witosa 170/176
Kuźnica Kiedrzyńska PL 42-233 Mykanów
tel. +48 34 377 71 00, fax +48 34 328 01 73 Hotline: 801 477 477, www.wkret-met.com

PRODUCT DATA SHEET - WKTHERM S-8

Section 1. PRODUCT DESCRIPTION

SCREWED-IN FASTENER WITH METAL PIN AND SHORT EXPANSION ZONE - WKTHERM S-8

Screwed-in fastener with metal pin and short expansion zone WKTHERM S-8 is made from polyethylene, and the pin from galvanized steel, with the head sealed in glass-fibre reinforced polyamide which reduces spot thermal conductivity of the fastener. Sealing rings on the head of the pin protect it against corrosion. Fastener WKTHERM S8 should be used to transfer loads of wind suction forces and applied as an additional mechanical fixing for the whole system, recommended for:

- **Polystyrene EPS**
- **XPS polystyrene**
- **mineral wool (with support washer TDX-90 and TDX-140)**
- **mineral wool lamella board (with support washer TDX-90 and TDX-140)**

Types of substrates on which the WKTHERM S-8 fastener can be installed according to EAD 330196-01-0604:

A	B	C	D	E
				
Concrete	Solid ceramic brick, silicate	Ceramic block	Lightweight aggregate elements	Aerated concrete

The fasteners have the European Technical Assessment: ETA-13/0724

POLSKI PRODUCENT

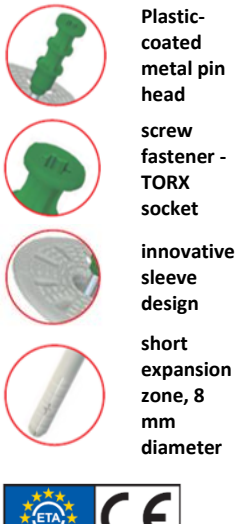

Plastic-coated metal pin head

screw fastener - TORX socket

innovative sleeve design

short expansion zone, 8 mm diameter

EUROPEJSKA APROBATA TECHNICZNA

Section 2. INSTALLATION METHOD

1. Before starting the installation, it is necessary to recognise the support and select the fasteners intended for it
2. The appropriate fastener length must be chosen so that the expansion zone is in the wall construction material
3. The minimum length of the fastener is: $L_d=t_{fix}+t_{tol}+h_{eff}$, where: t_{fix} - thickness of the applied thermal insulation, t_{tol} - thickness of the levelling layers (adhesive mortar + existing plaster), h_{eff} - anchorage depth of the fastener in the substrate (stated in the data sheet and technical approval)
4. Before installation, the substrate must be prepared according to the recommendations of the ETICS insulation system manufacturer
5. Thermal insulation panels must be adequately fixed with adhesive mortar
6. The diameter of the holes drilled must correspond to the diameter of the fasteners used
7. Holes in substrates made of solid materials should be at least 10 mm deeper than the anchoring depth of the fastener
8. Holes in solid materials must be cleaned of drill residue using a back-and-forth motion of the drill at reduced speed, repeating the operation four times.
9. Holes in substrates with voids and aerated concrete must be drilled without the use of a hammer, as this would cause the inner walls of the substrate to crack, reducing the tear resistance of the fasteners.
10. The fasteners must be fixed so that the installation location coincides with the position of the adhesive mortar on the thermal insulation board.
11. The fastener body must be positioned so that the fastener pressure plate is flush with the heat-insulating material.
12. Then screw in the pin, gently tightening the fastener to the thermal insulation (TORX-40 socket).
13. polystyrene cutter **WK-FT** , so-called flush-mounted installation
14. After installing the fastener, cover the mounting point with a **KS/KSG** polystyrene disc, the so-called recessed installation

Visible installation

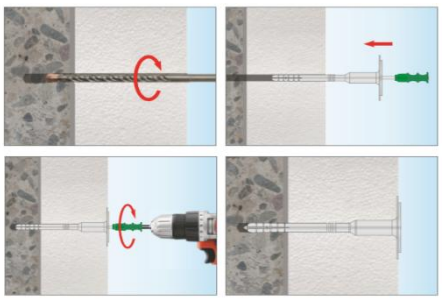

Immersed installation with polystyrene disc

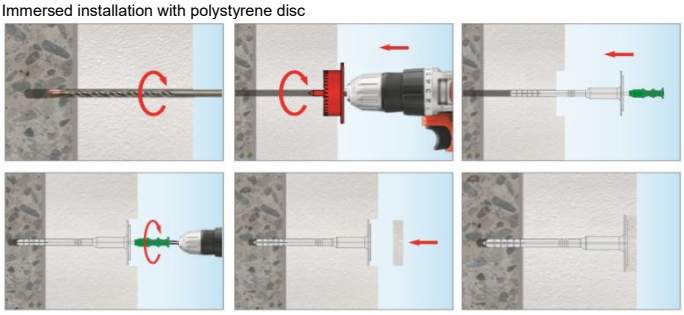

All rights reserved. The Charter may only be made available in the form in which it was delivered. No part (content such as text, graphics, logos, images, photos and any other data) presented in this document may be modified in any way or distributed in part without prior permission. All trademarks, graphics, brand names, logos and other data are protected by law and belong to their respective owners. Date of preparation: 16-10-2013 Date of update: 29.05.2026

Section 3. SPECIFICATIONS

TECHNICAL PARAMETERS		
Parameter	Unit	Value
Fastener diameter	d_k [mm]	8
Plate diameter	D_k [mm]	60
Anchorage depth	h_{eff} [mm]	25/65*
Depth of hole	h_0 [mm]	35/75*
Point thermal conductivity	χ [W/K]	0,002
Plate rigidity	S [kN/mm]	0,60
Utility categories	[-]	ABCDE
Fastener material	[-]	PE
Stem material	[-]	Galvanised steel, PA+GF coated header
European Technical Assessment	[-]	ETA-13/0724

*for category E substrates (aerated concrete)

STRENGTH PARAMETERS			
Substrate category	Type of substrate	Density [kg/dm^3]	Characteristic load capacity [kN]
A	Concrete C12/15	≥ 2,25	1,20
A	Concrete C16/20-C50/60	≥ 2,30	1,50
B	Solid ceramic brick	≥ 2,00	1,50
B	Solid silicate brick	≥ 2,00	1,50
C	Silicate channel blocks	≥ 1,60	0,90
C	Ceramic hollow brick	≥ 1,20	0,75
C	Lightweight concrete	≥ 0,80	0,75
D	Lightweight concrete	≥ 1,05	0,90
E	AAC2 aerated concrete	≥ 0,35	0,60
E	AAC7 aerated concrete	≥ 0,65	1,20

Partial safety factor γ_M = 2 in the absence of regulation

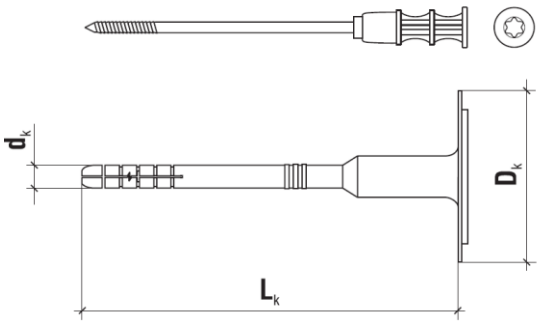

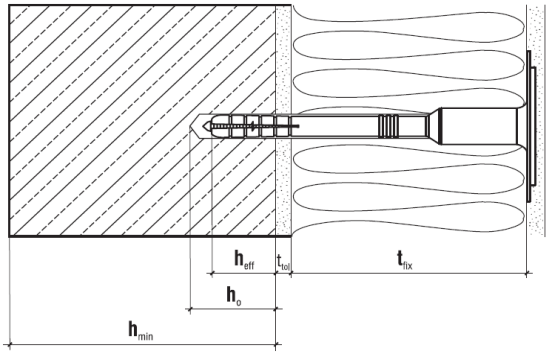

SELECTION TABLE						
Product code	Fastener diameter and length (d_k x L_k)	Thickness of thermal insulation material t_{fix} [mm]				Quantity in pack [pcs.]
		New buildings (t_{toll} includes 10 mm of glue)		Old buildings (t_{tol} includes 10 mm of glue + 20 mm of old plaster)		
		Without cutter	With cutter	Without cutter	With cutter	
WKTHERM-S-08095	8x95	60/20*	80/40*	40/-*	60/20*	200
WKTHERM-S-08115	8x115	80/40*	100/60*	60/20*	80/40*	200
WKTHERM-S-08135	8x135	100/60*	120/80*	80/40*	100/60*	200
WKTHERM-S-08155	8x155	120/80*	140/100*	100/60*	120/80*	200
WKTHERM-S-08175	8x175	140/100*	160/120*	120/80*	140/100*	200
WKTHERM-S-08195	8x195	160/120*	180/140*	140/100*	160/120*	200
WKTHERM-S-08215	8x215	180/140*	200/160*	160/120*	180/140*	100
WKTHERM-S-08235	8x235	200/160*	220/180*	180/140*	200/160*	100
WKTHERM-S-08255	8x255	220/180*	240/200*	200/160*	220/180*	100
WKTHERM-S-08275	8x275	240/200*	260/220*	220/180*	240/200*	100
WKTHERM-S-08295	8x295	260/220*	280/240*	240/200*	260/220*	100

*for category E substrates (aerated concrete)

Section 4. NOTES

1. All previous versions of this Data Sheet are no longer valid
2. Data given in this Product Data Sheet is in accordance with current knowledge and published in good faith. Klimas Wkręt-met Sp. z o.o. is not responsible for correctness and quality of the fixing if recommendations regarding method of use and installation are not followed.

All rights reserved. The Charter may only be made available in the form in which it was delivered. No part (content such as text, graphics, logos, images, photos and any other data) presented in this document may be modified in any way or distributed in part without prior permission. All trademarks, graphics, brand names, logos and other data are protected by law and belong to their respective owners. Date of preparation: 16-10-2013 Date of update: 29.05.2026