Technical and Test Institute for Construction Prague
Prosecká 811/76a
190 00 Prague
Czech Republic
eota@tzus.cz

Designated according to Article 29 of Regulation (EU) No 305/2011

Member of EOTA
www.eota.eu

European Technical Assessment

ETA 20/0641 of 30/10/2025

Technical Assessment Body issuing the ETA: Technical and Test Institute for Construction Prague	
Trade name of the construction product	LE-A4 LE-ZNA4 LE-DA4
Product family to which the construction product belongs	Product area code: 33 Torque controlled expansion anchor for use in cracked and uncracked concrete
Manufacturer	Wkręt-Met Sp. z o.o. ul. Wincentego Witosa 170/176 42-233 Kuźnica Kiedrzyńska Mykanów Poland
Manufacturing plant	PLANT1, PLANT2 - POLAND
This European Technical Assessment contains	17 pages including 15 Annexes which form an integral part of this assessment
This European Technical Assessment is issued in accordance with regulation (EU) No 305/2011, on the basis of	EAD 330232-01-0601 Mechanical fasteners for use in concrete
This version replaces	ETA 20/0641 issued on 28/12/2023

Translations of this European Technical Assessment in other languages shall fully correspond to the original issued document and should be identified as such.

Communication of this European Technical Assessment, including transmission by electronic means, shall be in full (excepted the confidential Annex(es) referred to above). However, partial reproduction may be made, with the written consent of the issuing Technical Assessment Body - Technical and Test Institute for Construction Prague. Any partial reproduction has to be identified as such.

1. Technical description of the product

The LE-A4, LE-ZNA4, LE-DA4 are through-fixing torque-controlled expansion anchors in sizes of M8, M10, M12 and M16. Each type comprises a nut, bolt, washer and expansion sleeve.

The anchors LE-A4 are made from stainless steel.

The anchors LE-ZNA4 and LE-DA4 are made from carbon steel with zinc coating.

The anchor is installed in a drilled hole; tightening the nut draws the cone into the sleeve. The expansion of this sleeve applies the anchorage.

The installed anchor is shown in Annex A 1.

2. Specification of the intended use in accordance with the applicable EAD

The performances given in Section 3 are only valid if the anchor is used in compliance with the specifications and conditions given in Annex B.

The provisions made in this European Technical Assessment are based on an assumed working life of the anchor of 50 years. The indications given on the working life cannot be interpreted as a guarantee given by the producer, but are to be regarded only as a means for choosing the products in relation to the expected economically reasonable working life of the works.

3. Performance of the product and references to the methods used for its assessment

3.1 Mechanical resistance and stability (BWR 1)

Essential characteristic	Performance
Characteristic resistance (static and quasi-static loading)	See Annex C 1 to C 3
Displacement	See Annex C 1 to C 3
Characteristic resistance (seismic performance category C1)	See Annex C 4

3.2 Safety in case of fire (BWR 2)

Essential characteristic	Performance
Reaction to fire	Class A1 according to EN 13501-1
Resistance to fire	See Annex C 5 and C 6

4. Assessment and verification of constancy of performance (AVCP) system applied with reference to its legal base

According to the Decision 96/582/EC of the European Commission[1], the system 1 of assessment verification of constancy of performance (see Annex V to the Regulation (EU) No 305/2011) apply.

5. Technical details necessary for the implementation of the AVCP system, as provided in the applicable EAD

Technical details necessary for the implementation of the AVCP system are laid down in the control plan deposited at Technical and Test Institute for Construction Prague.

Issued in Prague on 30.10.2025

By

Ing. Jiří Studnička, Ph.D.
Head of the Technical Assessment Body

TECHNICKÝ A ZKUŠEBNÍ ÚSTAV STAVEBNÍ PRAHA, s.p.
Technical and Test Institute for Construction Prague
ZÚS Czech Republic
Technical Assessment Body
Subjekt pro technické posuzování

[1] Official Journal of the European Communities L 254 of 08.10.1996

Installed anchor

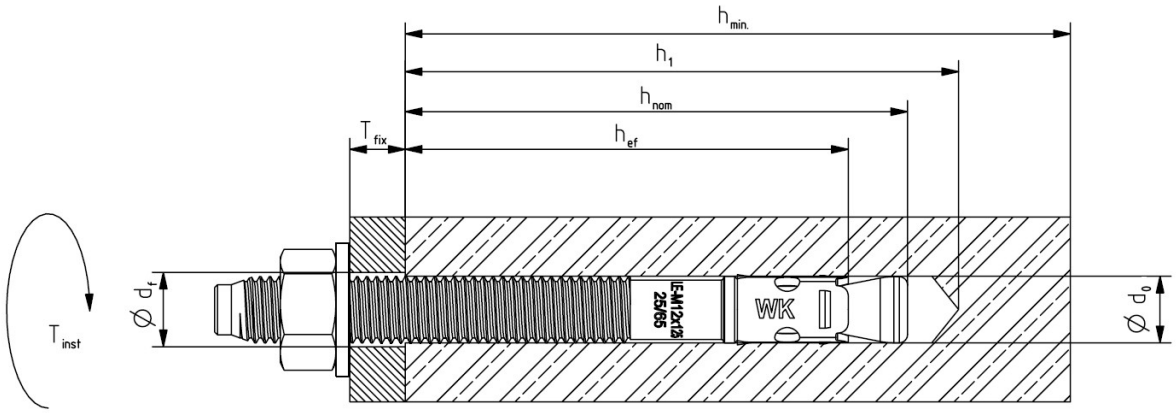

Components

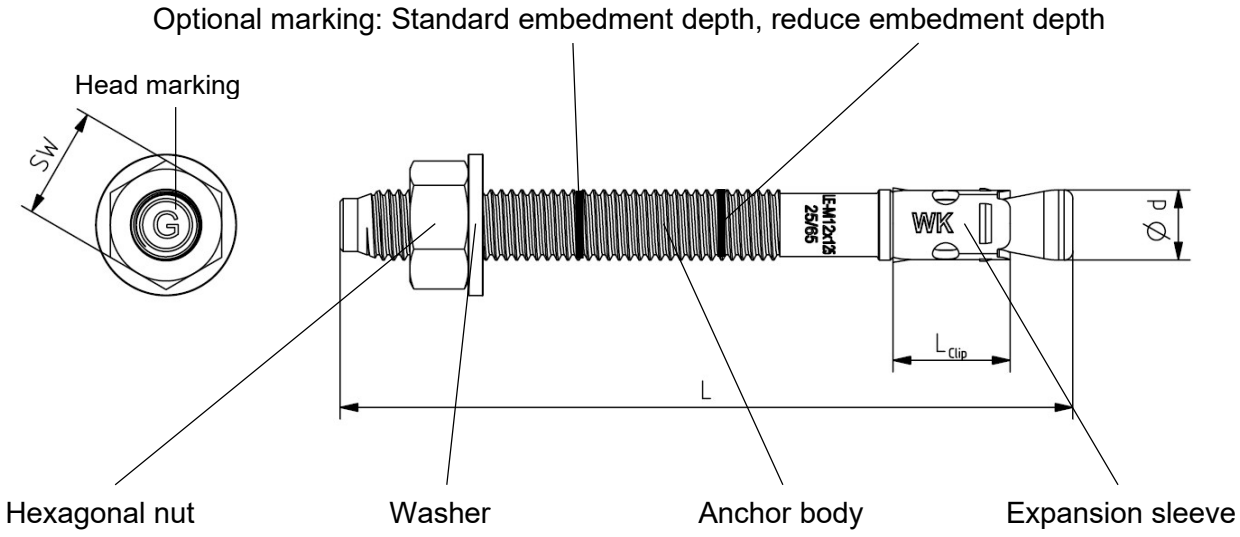

LE-A4, LE-ZNA4, LE-DA4	
Product description Installed conditions and components	**Annex A 1**

Table A1 - Materials

Component	Material
LE-A4	
Anchor body	Stainless steel A4
Expansion sleeve	Stainless steel A4
Hexagonal nut	Stainless steel A4 DIN 934 / EN ISO 898-2
Washer	Stainless steel A4 DIN 125 or EN ISO 7089 / DIN 9021A or EN ISO 7093
LE-ZNA4, LE-DA4	
Anchor body	Carbon steel
Expansion sleeve	Stainless steel A4
Hexagonal nut	Steel class 8 DIN 934 / EN ISO 898-2
Washer	Steel DIN 125 or EN ISO 7089 / DIN 9021A or EN ISO 7093
Protection	LE-ZNA4 - Zinc coating (≥ 5µm); electroplated acc. to EN ISO 4042 LE-DA4 - flake zinc (≥ 8µm) acc. to ISO 2178:2016

Table A2 – Marking

Parameters			M8	M10	M12	M16
Bolt length:	L	[mm]	60÷255	85÷255	85÷305	105÷345
Width torque wrench:	SW	[mm]	13	17	19	24

Head Bolt Marking									
Bolt length [mm] L ≥	20	65	77	90	103	115	128	141	153
Head marking	**B**	**C**	**D**	**E**	**F**	**G**	**H**	**I**	**J**
Bolt length [mm] L ≥	166	178	191	204	217	230	242	255	281
Head marking	**K**	**L**	**M**	**N**	**O**	**P**	**Q**	**R**	**S**

LE-A4, LE-ZNA4, LE-DA4

Product description
Materials
Marking

Annex A 2

Specifications of intended use

Anchorages subject to:

- Static and quasi-static load
- Fire exposure
- Seismic performance category C1

Base materials

- Cracked or uncracked concrete.
- Reinforced or unreinforced normal weight concrete of strength class C20/25 at minimum and C50/60 at maximum according EN 206:2013+A1:2016

Use conditions (Environmental conditions)

- Structures subject to dry internal conditions (LE-ZNA4, LE-DA4, LE-A4)
- Structures subject to external atmospheric exposure and to permanently damp internal condition, use according EN 1993-1-4:2006 + A1:2015, corresponding to corrosion resistance class:
  CRC III: only LE-A4

Design:

- The anchorages are designed in accordance with the EN 1992-4 under the responsibility of an engineer experienced in anchorages and concrete work.
- Verifiable calculation notes and drawings are prepared taking account of the loads to be anchored. The position of the anchor is indicated on the design drawings.
- Anchorages under fire exposure have to be designed in accordance with EN 1992-4.
- Anchorages under seismic actions have to be designed in accordance with EN 1992-4.

Installation:

- Anchor installation carried out by appropriately qualified personnel and under the supervision of the person responsible for technical matters of the site.
- Use of the anchor only as supplied by the manufacturer without exchanging any components of the anchor.
- Anchor installation in accordance with the manufacturer's specifications and drawings using the appropriate tools.
- Effective anchoring depth, edge distance and spacing not less than the specified values without minus tolerance.
- In case of aborted drill hole: new drilling at a minimum distance away of twice the depth of the aborted hole or smaller distance if the aborted drill hole is filled with high strength mortar and if under shear or oblique tension load it is not in the direction of load application.

LE-A4, LE-ZNA4, LE-DA4	**Annex B 1**
Intended use Specifications	

Table B1 - Installation parameters

Installation parameters			M8	M10	M12	M16
drill diameter:	d_o	[mm]	8	10	12	16
Fixture clearance hole diameter:	d_f	[mm]	10	12	14	18
nominal torque:	T_{inst}	[Nm]	20	30	50	100
Width torque wrench:	SW	[mm]	13	17	19	24
Standard embedment						
drill depth:	h_1	[mm]	52	74	88	106
embedment depth:	h_{nom}	[mm]	47	69	80	98
effective depth:	h_{ef}	[mm]	40	60	70	85
Reduced embedment						
drill depth:	h_1	[mm]	-	54	68	86
embedment depth:	h_{nom}	[mm]	-	49	60	78
effective depth:	h_{ef}	[mm]	-	40	50	65

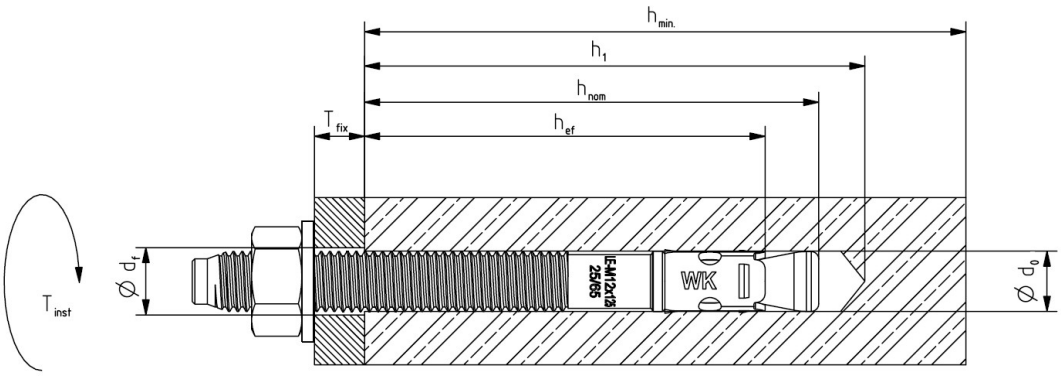

LE-A4, LE-ZNA4, LE-DA4

Intended use
Installation parameters

Annex B 2

Table B2 - Installation parameters – Minimum spacing and edge distance – LE-A4

Installation parameters			M8	M10	M12	M16
Standard embedment						
effective depth:	h_{ef}	[mm]	40	60	70	85
Minimum thickness of concrete member:	h_{min}	[mm]	100	120	160	170
Minimum allowable spacing:	s_{min}	[mm]	35	40	50	65
	for c ≥	[mm]	According to Annex B6			
Minimum allowable edge distance:	c_{min}	[mm]	40	45	55	65
	for s ≥	[mm]	According to Annex B6			
Minimum splitting area (uncracked concrete)	$A_{sp,req}$	[mm²]	23933	27707	36513	52238
Minimum splitting area (cracked concrete)	$A_{sp,req}$	[mm²]	19494	22379	29113	41138
Reduced embedment						
effective depth:	h_{ef}	[mm]	-	40	50	65
Minimum thickness of concrete member:	h_{min}	[mm]	-	100	100	130
Minimum allowable spacing:	s_{min}	[mm]	-	40	50	65
	for c ≥		-	According to Annex B6		
Minimum allowable edge distance:	c_{min}	[mm]	-	45	55	65
	for s ≥		-	According to Annex B6		
Minimum splitting area (uncracked concrete)	$A_{sp,req}$	[mm²]	-	27707	36513	52238
Minimum splitting area (cracked concrete)	$A_{sp,req}$	[mm²]	-	22379	29113	41138

For the calculation of minimum spacing and minimum edge distance of anchors in combination with standard or reduced embedment depth and with different thicknesses of concrete members the following equation shall be fulfilled:

$$\mathbf{A_{sp,req} < A_{sp,ef}}$$

$A_{sp,req}$ = required splitting area
$A_{sp,ef}$ = effective splitting area (according to Annex B6)

LE-A4

Intended use
Installation parameters

Annex B 3

Table B3 - Installation parameters – Minimum spacing and edge distance – LE-ZNA4

Installation parameters			M8	M10	M12	M16
Standard embedment						
effective depth:	h_{ef}	[mm]	40	60	70	85
Minimum thickness of concrete member:	h_{min}	[mm]	100	120	160	170
Minimum allowable spacing:	s_{min}	[mm]	35	40	50	65
	for c ≥	[mm]	According to Annex B6			
Minimum allowable edge distance:	c_{min}	[mm]	40	45	55	65
	for s ≥	[mm]	According to Annex B6			
Minimum splitting area (uncracked concrete)	$A_{sp,req}$	[mm²]	22345	26735	36978	42357
Minimum splitting area (cracked concrete)	$A_{sp,req}$	[mm²]	17181	20538	28370	31734
Reduced embedment						
effective depth:	h_{ef}	[mm]	-	40	50	65
Minimum thickness of concrete member:	h_{min}	[mm]	-	100	100	130
Minimum allowable spacing:	s_{min}	[mm]	-	40	50	65
	for c ≥		-	According to Annex B6		
Minimum allowable edge distance:	c_{min}	[mm]	-	45	55	65
	for s ≥		-	According to Annex B6		
Minimum splitting area (uncracked concrete)	$A_{sp,req}$	[mm²]	-	26735	36978	42357
Minimum splitting area (cracked concrete)	$A_{sp,req}$	[mm²]	-	20538	28370	31734

For the calculation of minimum spacing and minimum edge distance of anchors in combination with standard or reduced embedment depth and with different thicknesses of concrete members the following equation shall be fulfilled:

$$\mathbf{A_{sp,req} < A_{sp,ef}}$$

$A_{sp,req}$ = required splitting area
$A_{sp,ef}$ = effective splitting area (according to Annex B6)

LE-ZNA4

Intended use
Installation parameters

Annex B 4

Table B4 - Installation parameters – Minimum spacing and edge distance – LE-DA4

Installation parameters			M8	M10	M12	M16
Standard embedment						
effective depth:	h_{ef}	[mm]	40	60	70	85
Minimum thickness of concrete member:	h_{min}	[mm]	100	120	160	170
Minimum allowable spacing:	s_{min}	[mm]	54	82	109	116
Minimum allowable edge distance:	c_{min}	[mm]	54	82	109	116
Reduced embedment						
effective depth:	h_{ef}	[mm]	-	40	50	65
Minimum thickness of concrete member:	h_{min}	[mm]	-	100	100	130
Minimum allowable spacing:	s_{min}	[mm]	-	54	68	88
Minimum allowable edge distance:	c_{min}	[mm]	-	54	68	88

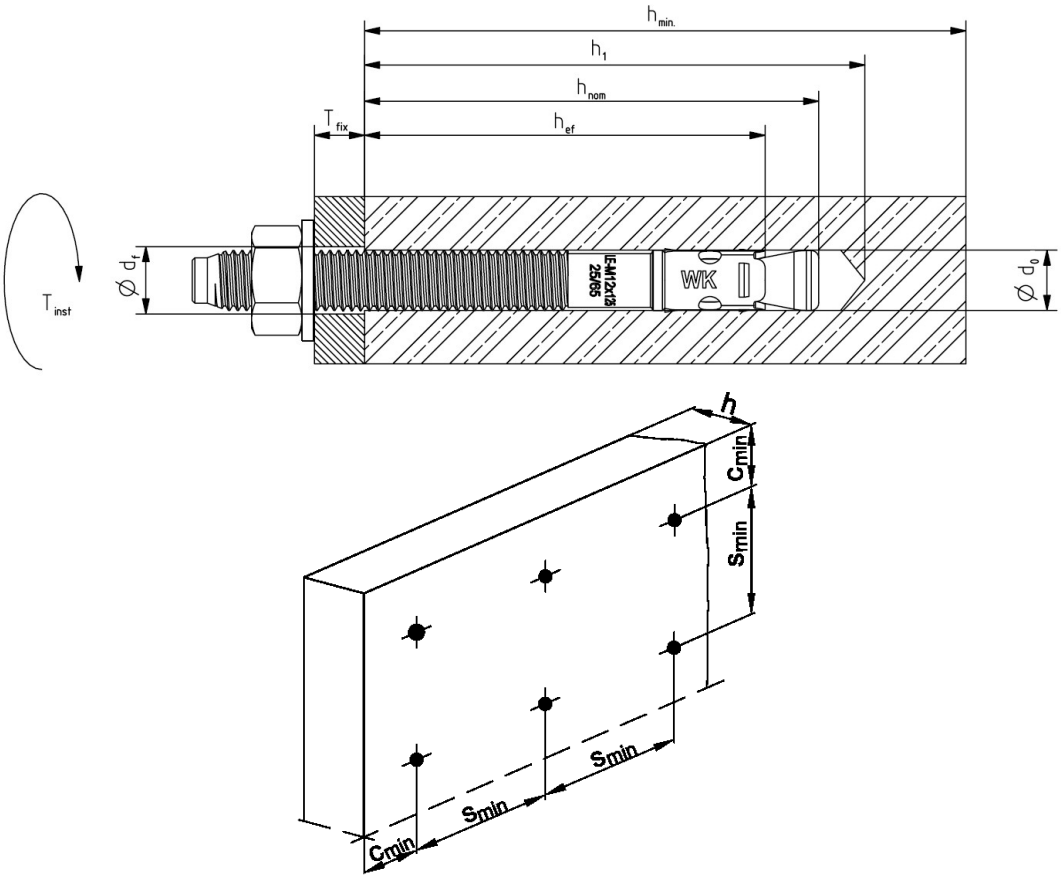

LE-DA4

Intended use
Installation parameters

Annex B 5

Table B5 – Effective splitting area $A_{sp,ef}$ with member thickness $h > h_{ef} + 1{,}5 \cdot c$ and $h \geq h_{min}$

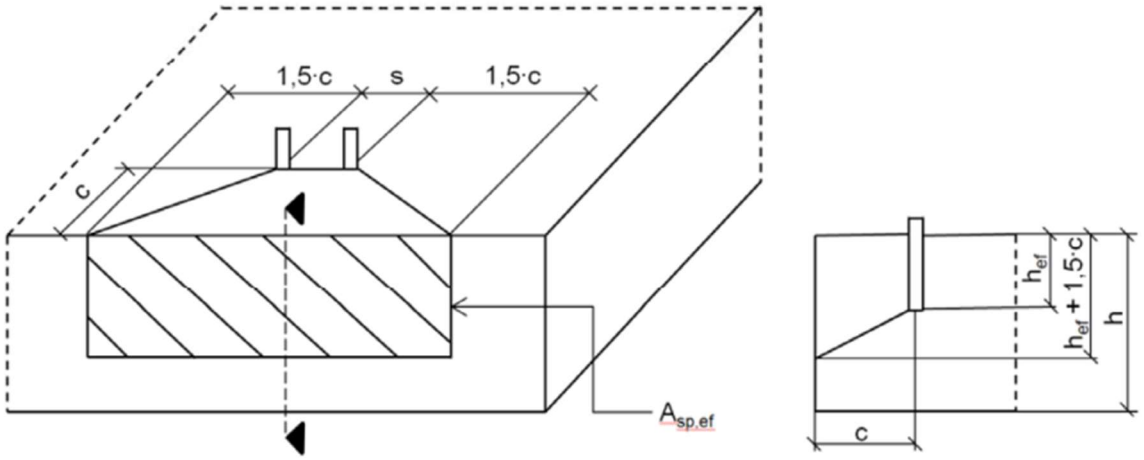

Single anchor and group of anchors with $s > 3 \cdot c$	$A_{sp,ef} = (6 \cdot c) \cdot (h_{ef} + 1{,}5 \cdot c)$ [mm²]	with $c \geq c_{min}$
Group of anchors with $s \leq 3 \cdot c$	$A_{sp,ef} = (3 \cdot c + s) \cdot (h_{ef} + 1{,}5 \cdot c)$ [mm²]	with $c \geq c_{min}$ and $s \geq s_{min}$

Table B6 – Effective splitting area $A_{sp,ef}$ with member thickness $h \leq h_{ef} + 1{,}5 \cdot c$ and $h \geq h_{min}$

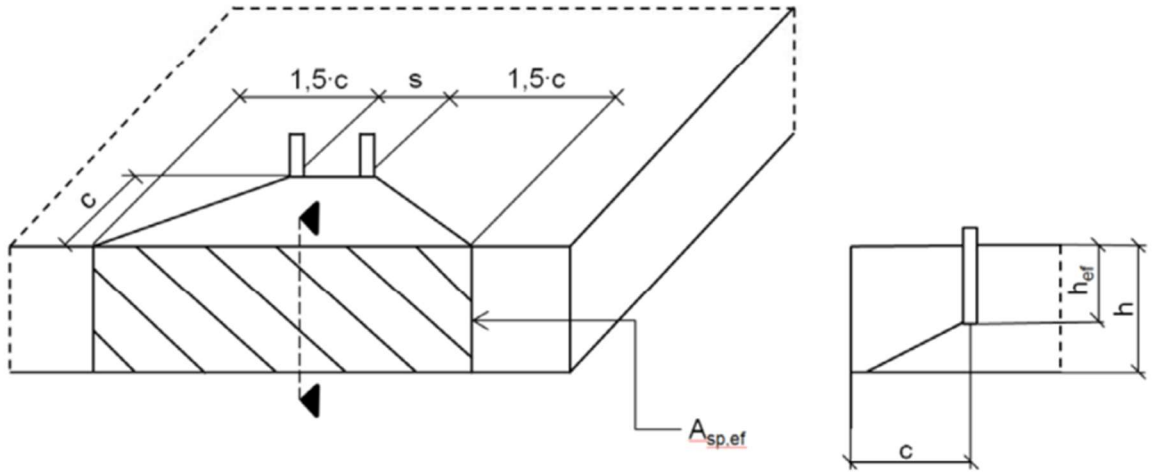

Single anchor and group of anchors with $s > 3 \cdot c$	$A_{sp,ef} = (6 \cdot c) \cdot$ existing h [mm²]	with $c \geq c_{min}$
Group of anchors with $s \leq 3 \cdot c$	$A_{sp,ef} = (3 \cdot c + s) \cdot$ existing h [mm²]	with $c \geq c_{min}$ and $s \geq s_{min}$

Edge distance and axial spacing shall be rounded to at least 5 mm (Fig. not to scale)

LE-A4, LE-ZNA4	**Annex B 6**
Intended use Installation parameters	

Installation instructions

	Drill a hole of required diameter and depth
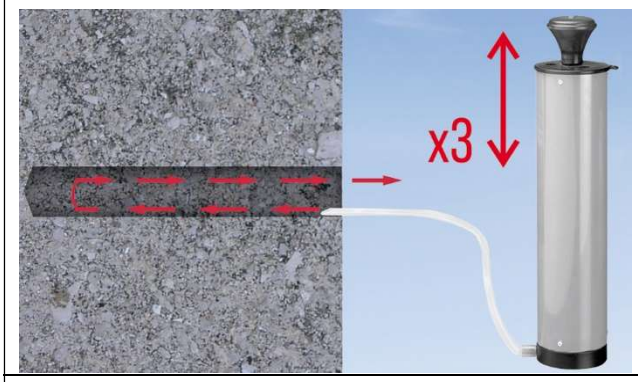	Clear the hole of drilling dust and debris (using blowpump or equivalent method)
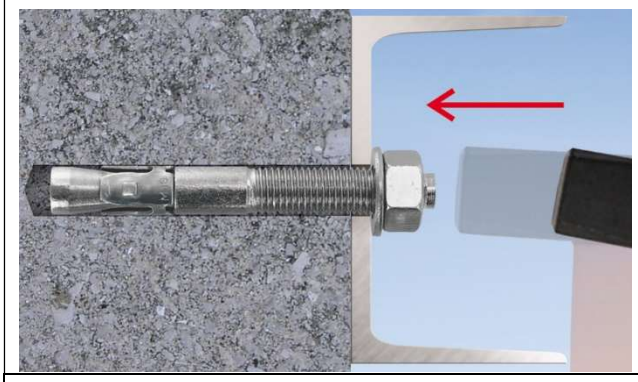	Lightly tap the throughbolt through the fixture into hole with a hammer, until fixing depth is reached
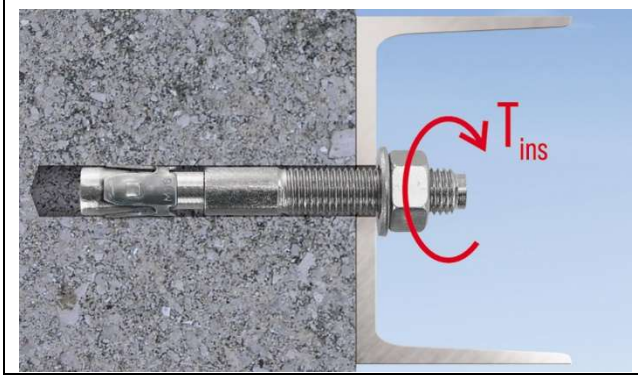	Tighten to the recommended torque

LE-A4, LE-ZNA4, LE-DA4	
Intended use Installation instructions	**Annex B 7**

Table C1 – Characteristic resistance under tension load

Size			M8	M10	M12	M16
STEEL FAILURE - LE-ZNA4, LE-DA4						
Characteristic resistance – reduced part	$N_{Rk.s}$	[kN]	16,2	27,7	38,6	71,9
Partial safety factor class:	$\gamma_{M,s}$	[-]	1,57			
STEEL FAILURE - LE-A4						
Characteristic resistance – reduced part	$N_{Rk.s}$	[kN]	16,7	28,5	39,7	74,0
Partial safety factor class:	$\gamma_{M,s}$	[-]	1,62			
PULL OUT FAILURE						
Characteristic resistance in uncracked concrete C20/25:	$N_{Rk,p}$	[kN]	1)	1)	1)	1)
Characteristic resistance in cracked concrete C20/25:	$N_{Rk,p}$	[kN]	1)	1)	1)	1)
Installation safety factor:	γ_{ins}	[-]	1,0			1,2
Increasing factors for $N^0_{Rk,c}$:	Ψ_c	C30/37	1,04			
		C40/50	1,06			
		C50/60	1,08			
CONCRETE CONE FAILURE AND SPLITTING FAILURE						
Factor for uncracked concrete:	$k_{ucr,N}$	[-]	11,0			
Factor for cracked concrete:	$k_{cr,N}$	[-]	7,7			
Installation safety factor:	γ_{ins}	[-]	1,0			1,2
Concrete cone failure:	$s_{cr,N}$	[mm]	3 x h_{ef}			
	$c_{cr,N}$	[mm]	1.5 x h_{ef}			
Standard embedment						
Effective anchorage depth:	h_{ef}	[mm]	40	60	70	85
Splitting failure:	$s_{cr,sp}$	[mm]	2 x $c_{cr,sp}$			
LE-A4						
Splitting failure:	$c_{cr,sp}$	[mm]	72	90	105	127,5
LE-ZNA4						
Splitting failure:	$c_{cr,sp}$	[mm]	72	96	105	127,5
LE-DA4						
Splitting failure:	$c_{cr,sp}$	[mm]	100	150	200	215
Reduced embedment						
Effective anchorage depth:	h_{ef}	[mm]	-	40	50	65
Splitting failure:	$s_{cr,sp}$	[mm]	2 x $c_{cr,sp}$			
LE-A4						
Splitting failure:	$c_{cr,sp}$	[mm]	-	100	100	165
LE-ZNA4						
Splitting failure:	$c_{cr,sp}$	[mm]	-	80	100	130
LE-DA4						
Splitting failure:	$c_{cr,sp}$	[mm]	-	100	125	165

1) The pull-out failure mode is not decisive

Table C2 – Displacement under tension load

Size LE-ZNA4, LE-DA4			**M8**	**M10**	**M12**	**M16**
Tension service load in concrete:	N	[kN]	4,1	4,1	5,8	7,2
Displacement:	δ_{N0}	[mm]	1,4	1,4	1,4	1,4
	$\delta_{N\infty}$	[mm]	0,6			
Size LE-A4			**M8**	**M10**	**M12**	**M16**
Tension service load in concrete:	N	[kN]	4,1	4,1	5,8	7,2
Displacement:	δ_{N0}	[mm]	1,0	1,1	1,4	1,4
	$\delta_{N\infty}$	[mm]	0,5			

LE-A4, LE-ZNA4, LE-DA4

Performances
Displacement under tension load

Annex C 2

Table C3 – Characteristic resistance under shear load

Size LE-ZNA4, LE-DA4			**M8**	**M10**	**M12**	**M16**
STEEL FAILURE WITHOUT LEVER ARM						
Characteristic resistance	$V_{Rk.s}$	[kN]	12,4	19,7	26,6	49,6
Partial safety factor class:	$\gamma_{M,s}$	[-]	1,31			
STEEL FAILURE WITH LEVER ARM						
Characteristic bending moment	$M_{Rk.s}$	[Nm]	25,5	50,8	89,1	226,4
Partial safety factor:	$\gamma_{M,s}$	[-]	1,31			
CONCRETE PRYOUT FAILURE						
Standard embedment						
Pryout factor:	k_8	[-]	1,0	2,0	2,0	2,0
Reduced embedment						
Pryout factor:	k_8	[-]	1,0	1,0	1,0	2,0
Installation safety factor:	γ_{ins}	[-]	1,0			
CONCRETE EDGE FAILURE						
Effective length of anchor:	l_f	[mm]	40	40 / 60	50 / 70	65 / 85
Outside diameter of anchor:	d_{nom}	[mm]	8	10	12	16
Installation safety factor:	γ_{ins}	[-]	1,0			

Size LE-A4			**M8**	**M10**	**M12**	**M16**
STEEL FAILURE WITHOUT LEVER ARM						
Characteristic resistance	$V_{Rk.s}$	[kN]	12,8	20,3	25,9	48,6
Partial safety factor class:	$\gamma_{M,s}$	[-]	1,35			
STEEL FAILURE WITH LEVER ARM						
Characteristic bending moment	$M_{Rk.s}$	[Nm]	26,2	52,3	91,7	233,1
Partial safety factor:	$\gamma_{M,s}$	[-]	1,35			
CONCRETE PRYOUT FAILURE						
Standard embedment						
Pryout factor:	k_8	[-]	1,0	2,0	2,0	2,0
Reduced embedment						
Pryout factor:	k_8	[-]	1,0	1,0	1,0	2,0
Installation safety factor:	γ_{ins}	[-]	1,0			
CONCRETE EDGE FAILURE						
Effective length of anchor:	l_f	[mm]	40	40 / 60	50 / 70	65 / 85
Outside diameter of anchor:	d_{nom}	[mm]	8	10	12	16
Installation safety factor:	γ_{ins}	[-]	1,0			

Table C4 – Displacement under shear load

Size LE-ZNA4, LE-DA4			**M8**	**M10**	**M12**	**M16**
Tension service load in concrete:	V	[kN]	6,1	9,6	12,7	19,7
Displacement:	δ_{V0}	[mm]	1,9	2,1	2,2	2,2
	$\delta_{V\infty}$	[mm]	2,9	3,1	3,2	3,2
Size LE-A4			**M8**	**M10**	**M12**	**M16**
Tension service load in concrete:	V	[kN]	6,6	10,7	12,3	19,3
Displacement:	δ_{V0}	[mm]	1,2	1,7	2,0	2,0
	$\delta_{V\infty}$	[mm]	1,8	2,6	2,9	2,9

LE-A4, LE-ZNA4, LE-DA4

Performances
Characteristic resistance under shear load
Displacement under shear load

Annex C 3

Table C5 – Characteristic resistances loads - seismic performance category C1

Size LE-ZNA4, LE-DA4			**M8**	**M10**	**M12**	**M16**
TENSION LOAD STEEL FAILURE						
Characteristic resistance	$N_{Rk,s,C1}$	[kN]	16,2	27,7	38,6	71,9
Partial safety factor	$\gamma_{Ms,s,C1}$	[-]	1,57			
TENSION LOAD PULLOUT FAILURE						
Characteristic resistance	$N_{Rk,p,C1}$	[kN]	8,5	8,5	12,0	18,0
Installation safety factor	γ_{inst}	[-]	1,0	1,0	1,0	1,2
SHEAR LOAD STEEL FAILURE WITHOUT LEVER ARM						
Characteristic resistance	$V_{Rk,s,C1}$	[kN]	8,2	13,6	20,7	39,7
Partial safety factor	$\gamma_{Ms,C1}$	[-]	1,31			
Size LE-A4			**M8**	**M10**	**M12**	**M16**
TENSION LOAD STEEL FAILURE						
Characteristic resistance	$N_{Rk,s,C1}$	[kN]	16,7	28,5	39,7	74,0
Partial safety factor	$\gamma_{Ms,s,C1}$	[-]	1,62			
TENSION LOAD PULLOUT FAILURE						
Characteristic resistance	$N_{Rk,p,C1}$	[kN]	8,5	8,5	12,0	18,0
Installation safety factor	γ_{inst}	[-]	1,0	1,0	1,0	1,2
SHEAR LOAD STEEL FAILURE WITHOUT LEVER ARM						
Characteristic resistance	$V_{Rk,s,C1}$	[kN]	7,2	11,0	17,1	33,0
Partial safety factor	$\gamma_{Ms,C1}$	[-]	1,35			

Table C6 – Characteristic values of resistance to tension load under fire exposure

Size LE-ZNA4, LE-DA4			M8	M10	M12	M16
Min. Effective anchorage depth:	h_{ef}	[mm]	40	40	50	65
Characteristic fire resistance duration at 30 minutes						
Steel failure	$N_{Rk,s,fi(30)}$	[kN]	0,4	0,9	1,7	3,1
Pull-Out Failure	$N_{Rk,p,fi(30)}$	[kN]	2,2	2,2	3,1	4,5
Concrete Cone Failure	$N_{Rk,c,fi(30)}$	[kN]	1,9	1,9	3,4	6,6
Characteristic fire resistance duration at 60 minutes						
Steel failure	$N_{Rk,s,fi(60)}$	[kN]	0,3	0,8	1,3	2,4
Pull-Out Failure	$N_{Rk,p,fi(60)}$	[kN]	2,2	2,2	3,1	4,5
Concrete Cone Failure	$N_{Rk,c,fi(60)}$	[kN]	1,9	1,9	3,4	6,6
Characteristic fire resistance duration at 90 minutes						
Steel failure	$N_{Rk,s,fi(90)}$	[kN]	0,3	0,6	1,1	2,0
Pull-Out Failure	$N_{Rk,p,fi(90)}$	[kN]	2,2	2,2	3,1	4,5
Concrete Cone Failure	$N_{Rk,c,fi(90)}$	[kN]	1,9	1,9	3,4	6,6
Characteristic fire resistance duration at 120 minutes						
Steel failure	$N_{Rk,s,fi(120)}$	[kN]	0,2	0,5	0,8	1,6
Pull-Out Failure	$N_{Rk,p,fi(120)}$	[kN]	1,7	1,7	2,4	3,6
Concrete Cone Failure	$N_{Rk,c,fi(120)}$	[kN]	1,6	1,6	2,7	5,2
Spacing						
Spacing	$s_{cr,N}$	[mm]	$4 \times h_{ef}$			
	s_{min}	[mm]	54	54	68	88
Edge distance	$c_{cr,N}$	[mm]	$2 \times h_{ef}$			
	c_{min}	[mm]	$2 \times h_{ef}$, however if the fire attack is from more than one side, the edge distance of the anchor has to be ≥ 300 mm and ≥ $2 \times h_{ef}$			

$\gamma_{M,fi}$ - partial safety factor for resistance under fire exposure (usually $\gamma_{M,fi}$ =1.0)

Table C7 – Characteristic values of resistance to shear load under fire exposure

Size LE-ZNA4, LE-DA4			M8	M10	M12	M16
Characteristic fire resistance duration at 30 minutes						
Steel Failure without lever arm	$V_{Rk,s,fi(30)}$	[kN]	0,4	0,9	1,7	3,1
Steel Failure with lever arm	$M_{Rk,s,fi(30)}$	[Nm]	0,4	1,1	2,6	6,7
Characteristic fire resistance duration at 60 minutes						
Steel Failure without lever arm	$V_{Rk,s,fi(60)}$	[kN]	0,3	0,8	1,3	2,4
Steel Failure with lever arm	$M_{Rk,s,fi(60)}$	[Nm]	0,3	1,0	2,0	5,0
Characteristic fire resistance duration at 90 minutes						
Steel Failure without lever arm	$V_{Rk,s,fi(90)}$	[kN]	0,3	0,6	1,1	2,0
Steel Failure with lever arm	$M_{Rk,s,fi(90)}$	[Nm]	0,3	0,7	1,7	4,3
Characteristic fire resistance duration at 120 minutes						
Steel Failure without lever arm	$V_{Rk,s,fi(120)}$	[kN]	0,2	0,5	0,8	1,6
Steel Failure with lever arm	$M_{Rk,s,fi(120)}$	[Nm]	0,2	0,6	1,3	3,3
Concrete pryout failure R30-R120						
Characteristic resistance	$V_{Rk,cp,fi}$	[kN]	Concrete pryout failure according to EN 1992-4			
Spacing	s_{min}	[mm]	54	54	68	88
Edge distance	c_{min}	[mm]	54	54	68	88

LE-A4, LE-ZNA4, LE-DA4

Performances
Characteristic values of resistance under fire exposure

Annex C 5

Table C8 – Characteristic values of resistance to tension load under fire exposure

Size LE-A4			M8	M10	M12	M16
Min. Effective anchorage depth:	h_{ef}	[mm]	40	40	50	65
Characteristic fire resistance duration at 30 minutes						
Steel failure	$N_{Rk,s,fi(30)}$	[kN]	0,7	1,5	2,5	4,7
Pull-Out Failure	$N_{Rk,p,fi(30)}$	[kN]	2,2	2,2	3,1	4,5
Concrete Cone Failure	$N_{Rk,c,fi(30)}$	[kN]	1,9	1,9	3,4	6,6
Characteristic fire resistance duration at 60 minutes						
Steel failure	$N_{Rk,s,fi(60)}$	[kN]	0,6	1,2	2,1	3,9
Pull-Out Failure	$N_{Rk,p,fi(60)}$	[kN]	2,2	2,2	3,1	4,5
Concrete Cone Failure	$N_{Rk,c,fi(60)}$	[kN]	1,9	1,9	3,4	6,6
Characteristic fire resistance duration at 90 minutes						
Steel failure	$N_{Rk,s,fi(90)}$	[kN]	0,4	0,9	1,7	3,1
Pull-Out Failure	$N_{Rk,p,fi(90)}$	[kN]	2,2	2,2	3,1	4,5
Concrete Cone Failure	$N_{Rk,c,fi(90)}$	[kN]	1,9	1,9	3,4	6,6
Characteristic fire resistance duration at 120 minutes						
Steel failure	$N_{Rk,s,fi(120)}$	[kN]	0,4	0,8	1,3	2,5
Pull-Out Failure	$N_{Rk,p,fi(120)}$	[kN]	1,7	1,7	2,4	3,6
Concrete Cone Failure	$N_{Rk,c,fi(120)}$	[kN]	1,6	1,6	2,7	5,2
Spacing						
Spacing	$s_{cr,N}$	[mm]	$4 \times h_{ef}$			
	s_{min}	[mm]	54	54	68	88
Edge distance	$c_{cr,N}$	[mm]	$2 \times h_{ef}$			
	c_{min}	[mm]	$2 \times h_{ef}$, however if the fire attack is from more than one side, the edge distance of the anchor has to be ≥ 300 mm and ≥ $2 \times h_{ef}$			

$\gamma_{M,fi}$ - partial safety factor for resistance under fire exposure (usually $\gamma_{M,fi}$ =1.0)

Table C9 – Characteristic values of resistance to shear load under fire exposure

Size LE-A4			M8	M10	M12	M16
Characteristic fire resistance duration at 30 minutes						
Steel Failure without lever arm	$V_{Rk,s,fi(30)}$	[kN]	0,7	1,5	2,5	4,7
Steel Failure with lever arm	$M_{Rk,s,fi(30)}$	[Nm]	0,7	1,9	3,9	10,0
Characteristic fire resistance duration at 60 minutes						
Steel Failure without lever arm	$V_{Rk,s,fi(60)}$	[kN]	0,6	1,2	2,1	3,9
Steel Failure with lever arm	$M_{Rk,s,fi(60)}$	[Nm]	0,6	1,5	3,3	8,3
Characteristic fire resistance duration at 90 minutes						
Steel Failure without lever arm	$V_{Rk,s,fi(90)}$	[kN]	0,4	0,9	1,7	3,1
Steel Failure with lever arm	$M_{Rk,s,fi(90)}$	[Nm]	0,4	1,2	2,6	6,7
Characteristic fire resistance duration at 120 minutes						
Steel Failure without lever arm	$V_{Rk,s,fi(120)}$	[kN]	0,4	0,8	1,3	2,5
Steel Failure with lever arm	$M_{Rk,s,fi(120)}$	[Nm]	0,4	1,0	2,1	5,3
Concrete pryout failure R30-R120						
Characteristic resistance	$V_{Rk,cp,fi}$	[kN]	Concrete pryout failure according to EN 1992-4			
Spacing	s_{min}	[mm]	54	54	68	88
Edge distance	c_{min}	[mm]	54	54	68	88

LE-A4, LE-ZNA4, LE-DA4

Performances
Characteristic values of resistance under fire exposure

Annex C 6