Klimas Wkręt-met Sp. z o.o. ul. W. Witosa 170/176
Kuźnica Kiedrzyńska 42-233 Mykanów
tel. +48 34 377 71 00, fax. +48 34 328 01 73 Infolinia: 801 477 477, www.wkret-met.com

PRODUCT DATA SHEET – WHOW

Section 1. PRODUCT DESCRIPTION

CONCRETE FRAME SCREW WITH PAN HEAD – WHOW

POLSKI PRODUCENT

WHOW



Concrete frame screws WHOW – for fixing of window and door frames PCV is made of carbon steel with protective zinc coating. Screws comprise threaded section on the whole length and pan head. Thread design ensures reliable and long-lasting connection. Screws are designed for fixing of window and door frames in timber and masonry.

Types of substrates on which concrete frame screw WHOW can be installed:

- **Normal concrete**
- **Solid clay brick**
- **Autoclaved aerated concrete**

Concrete frame screws hold National Technical Assessment: ITB-KOT-2017/0308

Section 2. METHOD OF INSTALLATION

1. Original screws delivered by the manufacturer can be used only
2. Before installation identify a substrate in which the screw will be installed and compare loads which the screw will carry to resistance values given in Product Data Sheet or National Technical Assessment
3. Select adequate screw length, depending on thickness of members being fixed
4. Use proper method of drilling according to a substrate type (holes in masonry substrate made of autoclaved aerated concrete blocks should be drilled using a drill without impact)
5. Diameter of drilled holes should match diameter of hole recommended by the manufacturer
6. Drilled holes in substrates of solid materials should be deeper by min. 10mm compared to the screw anchorage depth
7. Clean the holes in solid materials of drillings with a back and forth motion of the drill at a reduced speed
8. Fixing is executed by driving the screw using screw gun with adequate bit (TORX-30)

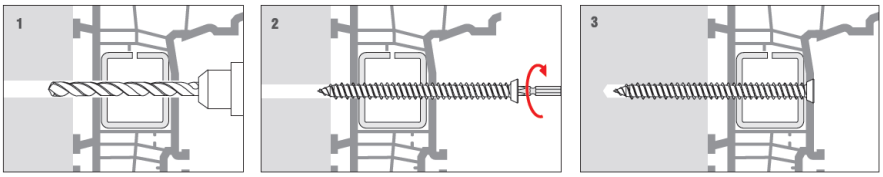

Section 3. TECHNICAL DATA

TECHNICAL PARAMETERS		
Parameter	Unit	Value
		WHOW
Screw diameter	d_k [mm]	7,5
Hole/drill diameter	d_0 [mm]	6
Effective anchorage depth	h_{eff} [mm]	30/40/60*
Drilled hole depth	h_0 [mm]	40/50/70*
Drive type	[-]	TORX-30
Screw material	[-]	Zinc-plated steel
National Technical Assessment	[-]	ITB-KOT-2017/0308

*for concrete / solid brick / autoclaved aerated concrete

RESISTANCE		
Substrate type	Design resistance – WHOW	
	Pull-out [kN]	Shear [kN]
Concrete C20/25 – C50/60	1,19	2,40
Solid clay brick	0,80	1,60
Autoclaved aerated concrete	0,20	0,40

INSTALLATION PARAMETERS			
Substrate type	Min. substrate thickness	Min. distance from edge	Min. axial distance
	h_{min} [mm]	c_{min} [mm]	L_{os} [mm]
Concrete C20/25 – C50/60	80	45	250
Solid clay brick	80	60	250
Autoclaved aerated concrete	90	90	250

All rights reserved The sheet may be disclosed only in the form as delivered. No part (contents such as text, graphics, logos, figures, pictures, and any other data) given in this document may be modified or published whatsoever in part, without prior authorisation. Any trademarks, graphic symbols, trade names, logos and other data are protected by copyright and are property of their owner. Created: 2013-10-16 Updated: 2026-11-02

PRODUCT DATA SHEET – WHOW

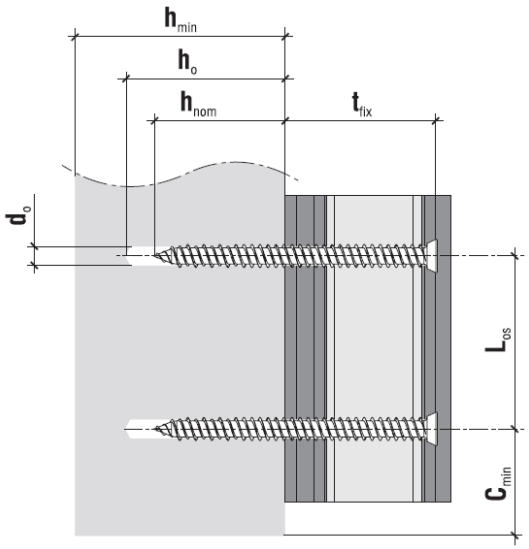

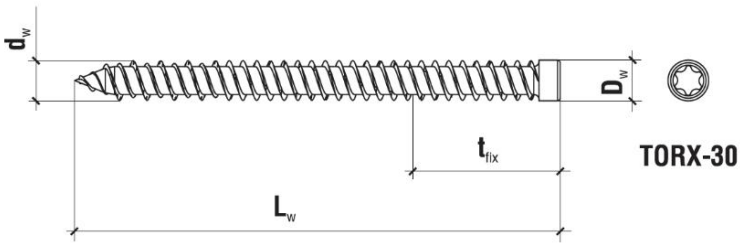

SELECTION TABLE – WHOW				
Product code	Screw diameter and length	Head diameter	Drive type	Number of pieces in a box
	d_w x L_w [mm]	D_w [mm]	[-]	[pcs]
WHOW-75042	7,5x42	8,5	TORX-30	200
WHOW-75062	7,5x62	8,5	TORX-30	200
WHOW-75082	7,5x82	8,5	TORX-30	100
WHOW-75102	7,5x102	8,5	TORX-30	100
WHOW-75112	7,5x112	8,5	TORX-30	100
WHOW-75132	7,5x132	8,5	TORX-30	100
WHOW-75152	7,5x152	8,5	TORX-30	100
WHOW-75182	7,5x182	8,5	TORX-30	100
WHOW-75212	7,5x212	8,5	TORX-30	100

SECTION 4. REMARKS

1. All previous versions of this Product Data Sheet shall cease to be valid
2. Data given in this Product Data Sheet is in accordance with current knowledge and published in good faith.
   Klimas Wkret-met Sp. z o.o. is not responsible for correctness and quality of the fixing if recommendations regarding method of use and installation are not followed.

All rights reserved The sheet may be disclosed only in the form as delivered. No part (contents such as text, graphics, logos, figures, pictures, and any other data) given in this document may be modified or published whatsoever in part, without prior authorisation. Any trademarks, graphic symbols, trade names, logos and other data are protected by copyright and are property of their owner. Created: 2013-10-16 Updated: 2026-11-02